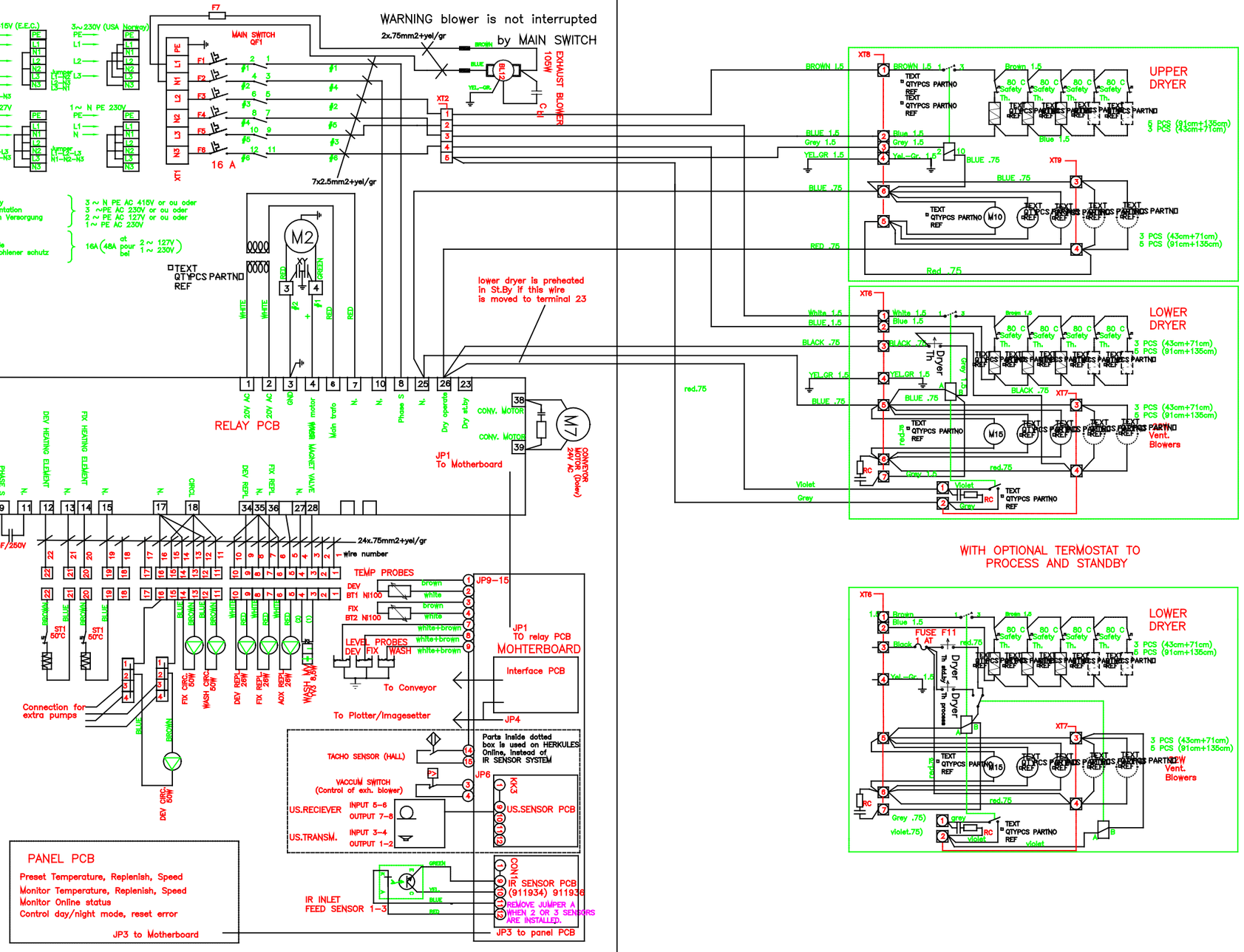


This Document contains proprietary data of Echo Graphic.
No information, reproduction or use of any part thereof may be used without written permission.

Tolerance unless otherwise specified : machined surfaces DS 2768-1 measurments under 120mm after folding ±0.5

| More Than | Incl. | Tol. ± |
|---|---|---|
| (0.5) | 6 | 0.1 |
| (6) | 30 | 0.2 |
| (30) | 120 | 0.3 |
| (120) | 315 | 0.5 |
| (315) | 1000 | 0.8 |
| (1000) | 2000 | 1.2 |

Surface Treatment :

Material :

Echo Graphic
Håndværkervej 2-6
DK-9560 Hadsund Danmark
Telefon 98571955
Telefax 98571591

Designer : CV | Drawn : CV | Date : 24-02-00 | Scale : 1:1

Name : GL. 2000 Interconnec. diagram

K.nr :

Drawing no. : 6322